Modified Article	Date of Application	Date of Publication
4.5 Supercharging	01/01/2019	01/01/2019

The 2nd Category provides for two-seater sports racing automobiles and other highly-modified cars:

Group 2A Sports Cars, open and closed

Group 2B Prodsports

Group 2C Supersports

Group 2F Prodsports

Automobiles must comply with the General Requirements for Automobiles, including Schedules A, B and, in races, C (refer "General Requirements for Cars and Drivers" in the CAMS Manual) as well as the Specific Requirements for each group.

GROUP 2B – GROUP 2B PRODSPORTS

The list of automobiles eligible for Class I or II as defined under 1.2 below is shown in "Group 2B Prodsports and 2F Prodsports Eligible Automobiles.

NATIONAL ASSOCATION

Sports Car Racing Association of Australia (SCRAA)

Website: www.scraa.com.au

1. DEFINITIONS

1.1 GROUP 2B PRODSPORTS

A race vehicle derived from a registrable production sports car, with significant modifications to improve performance and reliability in speed events and races. The function of the Group 2B Prodsports Category is to cater for more highly modified Sports Cars, allowing competitors to further develop their vehicles over "Production Sports Cars" in performance design concept.

1.2 ELIGIBILITY

(a) Cars must be derived from the Eligible Automobiles List approved by CAMS. To be considered for addition to the Eligible Automobiles List, at least 10 vehicles must have been sold and registered for road use in Australia with identical specification. Vehicles shall be classified as Class I, Class II or Class III depending on production numbers and production philosophy.

Class I: Vehicles in Class I shall be representative of mass-produced vehicles, featuring fully enclosed bodywork, of which a minimum of 500 were produced world-wide in at least one 12 calendar month period. Unless otherwise specified, such vehicles shall compete in their basic form for the model represented.

Class II: Vehicles in Class II are limited production vehicles, which do not comply with the provisions of 1.2(a) above, of which at least 10 examples have been constructed in a continuous 24-month period. These vehicles shall be subject to a CAMS Specification Document which details the base specification against which freedoms permitted within the Group 2B regulations may be applied.

Class III: Vehicles in Class III are imported vehicles, of which a minimum of 100 vehicles have been produced in their country of origin and are able to be road registered in their country of origin. The vehicles bodywork must be fully enclosed and these vehicles shall be subject to a CAMS Specification Document which details the base specification against which freedoms permitted within the Group 2B regulations may be applied.

© Confederation of Australian Motor Sport Ltd. All use subject to Conditions of Use at www.cams.com.au

(b) The Sports Car Racing Association of Australia (SCRAA) will make representations to the CAMS Australian Motor Racing Commission (AMRC) on behalf of its members.

(c) The AMRC shall be solely responsible for making recommendations to CAMS with regards to all matters relating to the recognition by CAMS of any vehicle as a Sports Car.

(d) Notwithstanding the provisions of Article 1.2 CAMS reserves the right to include or restrict other makes and models, or parts from such, at its sole discretion.

1.3 DECORATIVE STRIPS

These are regarded as any parts following the external contour of the bodywork and less than 100mm high; the function of which is to prevent minor body damage or is decorative. Badges describing the vehicle manufacturer and/or model are considered to be within this definition, but not the radiator grille.

1.4 MATERIALS

The use of carbon/carbon Kevlar composites, or titanium alloys, in any non-standard structural or mechanical component, unless specifically provided for by an article in the present regulations, is prohibited.

1.5 OPEN CARS

Any vehicle which does not have a supporting structure between the upper edges of the front windscreen pillars and rear window (where fitted) shall be regarded as an open car.

1.6 FREE

A component, deemed to be free under these regulations may, where fitted to the vehicle as standard, be removed or replaced. Where the removed component is replaced, the replacement is not restricted in design or material (unless otherwise specified) providing it performs only the same function. No modification may be made to surrounding components or bodywork to which the replacement is fitted, unless otherwise permitted. Where freedom is granted for the fitment of any component, such freedom is restricted to that component and such modifications as are allowed in Article 3.11. For the purpose of this article, a component shall be deemed to include all other components with which it is integrated, or to which it is attached by means the manufacturer intended to be permanent. Where a system is deemed as free, all components solely associated with that system are regarded as free, as per above.

2. REGULATIONS

2.1 ROLE OF CAMS

The following technical regulations for Group 2B Prodsports are issued by CAMS and must be read in conjunction with the relevant Schedules of “General Requirements for Cars and Drivers”.

2.2 PUBLICATION DATE FOR AMENDMENTS

Each year in January at the latest, CAMS will publish all changes made to these regulations in the CAMS Manual of Motor Sport. Changes made for safety may come into force without notice. CAMS reserves the right to alter regulations at its discretion.

2.3 MEASUREMENT

All measurements relevant to the bodywork and suspension must be made while the car is stationary on a flat horizontal surface, without the driver, and with the steering centred.

2.4 LOG BOOK/ELIGIBILITY

The Competitor is responsible for furnishing any documentation to prove the eligibility of any part used or modification performed otherwise outside of these regulations.

2.5 STANDARD EQUIPMENT

(a) Where an article in the present regulations refers to standard equipment, it refers to the specifications of or parts fitted to the particular model or marketing designation of the vehicle as supplied by the manufacturer. Parts available as options, whether at additional cost or not, are not eligible unless otherwise specified. The model represented shall be as specified on the entry form.

(b) Optional parts are permissible for Class I cars provided they are manufacturer supplied only. Other options that were not only manufacturer supply are forbidden.

© Confederation of Australian Motor Sport Ltd. All use subject to Conditions of Use at www.cams.com.au

2.6 MODIFICATIONS

Any aspect relating to the construction, modification and/or preparation of the vehicle, which is not specifically authorised in the present regulations, is forbidden. The only work which may be otherwise performed on the car is that necessary for normal servicing or the replacement of parts damaged by wear or accident, or that required under Schedules A, B and C of the CAMS Manual of Motor Sport (refer "General Requirements for Cars and Drivers"). Unless otherwise specified, a part replaced through damage or wear must only be replaced by an original part identical to the previously undamaged one.

3. BODYWORK AND DIMENSIONS

3.1 STRENGTHENING

It is permitted to seam weld the bodyshell/chassis and to add strengthening including but not restricted to the safety cage structure.

3.2 BUMPER BARS AND EMBELLISHMENTS

(a) Bumper bars not integral with the coachwork may be removed. External decorative strips, mud flaps and unused brackets may be removed. Registration plates, registration plate mountings and associated lighting components may be removed. Sump guards/splash guards may be removed or added. No part of any additional or replacement sump/splash guard may extend to the rear of the rearmost point of the engine block as installed in the vehicle.

(b) It is permitted to add a vent/s to the bonnet/engine cover to assist engine cooling. Such a vent may not be placed in such a position as to be a danger to the driver in case of fire or spillage of liquids.

(c) Vent/s may also be used in non-structural side panels to assist brake cooling.

3.3 FRONT AIR DAM

It is permitted to fit an airdam to the front of the car, subject to the following restrictions:

(a) No part extends forward of the foremost point of the original vehicle.

(b) It may be no wider than the coachwork as measured above the centre of the front wheel hubs.

(c) Undertrays may be installed, including a splitter, and be used as an aerodynamic aid. No part of the undertray/splitter may extend further rearward than 25% of the total length of the original vehicle, plus 10% as necessary for attachment purposes. It must not project any further forward than 100mm from the point of attachment at the foremost point of the original bodywork and no wider than the outer edge of the tyres at the wheel hubs, be no lower than the lowest point of the bodywork plus the thickness of the undertray/splitter. The undertray/splitter must not exceed 12mm thickness at any point while remaining parallel with the sills. (Tyres must be inflated to a minimum of 1.8 bar of pressure.)

(d) Where a vehicle has a full length undertray as standard from the manufacturer this may remain in place but must not be replaced by another of different design or material.

(e) On vehicles where the front bumper/fascia is integrated with the coachwork, the air dam may replace the original bumper/fascia provided that the original mounts are retained.

(f) Cannards/diveplanes may be fitted provided they are no wider than the vehicle at the widest point.

3.4 REAR AERODYNAMIC DEVICES

It is permitted to fit a rear deck spoiler or wing provided that either:

(a) It was supplied as a factory option for that particular model of vehicle or another model of the same family of vehicle, provided it complies with Article (c)(i) below. It is permissible to replace one rear aerodynamic device with another complying with the present article; or

(b) It is within 150mm of the coachwork at all points, and no part extends forward of the rear axle centreline; or

(c) It is a rear wing assembly subject to the following constraints:

(i) It extends no further rearward than 200mm beyond the rearmost part of the original bodywork (diagram 2B-1, measurement A).

(ii) It extends no further forward than 400mm beyond the rearmost point of the original bodywork (diagram 2B-1, measurement B).

© Confederation of Australian Motor Sport Ltd. All use subject to Conditions of Use at www.cams.com.au

(iii) There is only a single wing element having an overall front to rear measurement of no greater than 300mm when measured horizontally (diagram 2B-1, measurement C).

(iv) No part of the horizontal wing element shall be higher than a horizontal plane located 350 mm above the point on the bodywork along the longitudinal centre line of the vehicle, vertically below the wing leading edge (diagram 2B-1, measurement D).

(v) The overall width of the wing assembly shall be no wider than the widest part of the bodywork at the forward point of attachment.

(d) It is permitted to add a rear diffuser for the expulsion of air from under the car provided;

(i) it is no wider than the rear of the car when mounted;

(ii) it is no lower than 100mm from the ground at its lowest point; and

(iii) it extends no further forward than 20% of the total original length of the vehicle.

DRAWING 2B-1

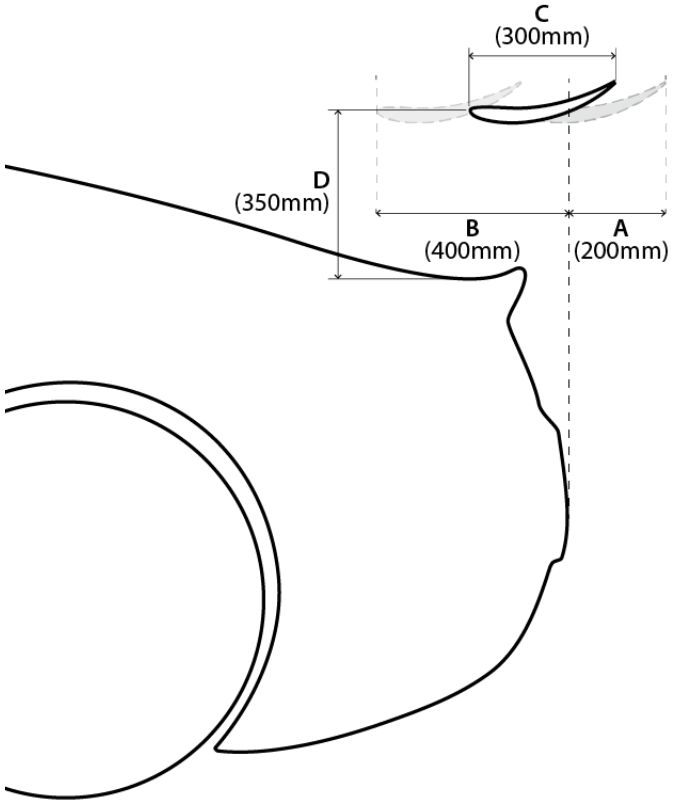

3.5 AERODYNAMIC DEVICES GENERAL

(a) Any specific part of the car influencing its aerodynamic performance fitted as specified in 3.3 and 3.4 above:

(i) May not be used for mounting any additional devices or performing any alternative functions other than the channelling of air for cooling purposes.

(ii) Must be rigidly secured to the entirely sprung part of the car (rigidly secured means not having any degree of freedom).

(iii) Must remain in its entirety immobile in relation to the remaining sprung parts of the car. Where an original airdam incorporates a moveable component, such component must be rendered inoperative and be fixed into position.

© Confederation of Australian Motor Sport Ltd. All use subject to Conditions of Use at www.cams.com.au

3.6 COCKPIT COVERING, OPEN VEHICLES

It is permitted for the cockpit opening of open vehicles to be partially covered by a tonneau cover. .

3.7 TIMING DEVICE

It is permitted to remove the minimum amount of metal necessary to facilitate fitment of a timing transponder to the upper surface of the cockpit floor.

3.8 SOUND DEADENER

Sound deadener (bitumen and fabric types etc.) may be removed from the body shell and hung panels.

3.9 WINDSCREEN, WINDOWS AND MIRRORS

(a) **Closed cars:** The windscreen must be of laminated glass, unless an original non-glass windscreen is retained, and may incorporate defrosting equipment. Others made from rigid, transparent materials may replace all other windows. Moveable windows may be made fixed and their regulators and associated fittings removed.

(b) **Open cars:** All windows and their associated fittings may be removed, including the windscreen and its associated pillars/coachwork. Where an original windscreen is removed, a transparent windscreen with a vertical height of 75mm above the adjacent coachwork must be fitted, extending at least 250mm in width, in front of the driver's seat.

(c) Rear view mirrors may be replaced or deleted, provided that the provisions of Schedule C (refer “General Requirements for Cars and Drivers”) are respected.

3.10 REMOVABLE PANELS

The following panels may be replaced by others of free construction provided that they are of identical external shape save as provide for in Article 3.10 below:

(a) All external non-swinging panels which are removable (i.e. attached to the bodyshell by bolts or screws).

(b) The bonnet and the bootlid or rear hatch.

(c) The outer doorskins. Where the doorskins are replaced, at least one anti-intrusion doorbar must be fitted on the driver’s side as part of the safety cage structure.

(d) Steel or plastic dashboards that are affixed by means of bolts or screws.

3.11 WHEEL AND TYRE CLEARANCE:

It is permitted to flare the external mudguard panels to cover the permitted wheels down to the level of the upper flange (see Group 2F Prodsports Diagram 2). Such flaring must not extend further than 200mm radially from the original wheelarch opening. Inner mudguard skirts/wheel tubs may be modified to provide clearance for the maximum permitted complete wheel. In no instance may the chassis rails, whether separate from or as part of the bodyshell, be modified.

3.12 GENERAL:

Holes may be drilled for fasteners e.g. bolts, screws, rivets etc. It is permitted to cut holes of the minimum necessary dimension for the passage of wiring and fuel, brake, oil and intercooler lines/hoses.

4. ENGINE

4.1 GENERAL:

(a) Engine capacity for reciprocating engines may be varied within the limits of the recognised or replacement block.

(b) Save for the restrictions imposed in Articles 1.4, 4.2, 4.3 and 4.4, the remainder of the engine assembly and associated systems are free.

4.2 RECIPROCATING ENGINES:

(a) The cylinder head/s must be those that were standard for that particular model. The cylinder head/s may be modified only by the removal of metal.

(b) The cylinder block may be replaced by another of the same family of block, which is deemed to be one that:

© Confederation of Australian Motor Sport Ltd. All use subject to Conditions of Use at www.cams.com.au

(i) is from the same manufacturer;

(ii) has the same cylinder bore spacing and general configuration; and

(iii) retains the same cylinder head bolt positions.

(c) The cylinder block may be modified only by the removal of metal, whilst retaining the original configuration.

4.3 ROTARY ENGINES

The rotor housings and end and intermediate plates must be those that were standard for that particular model. The inlet ports in the end and intermediate plates may be modified by the removal of metal, including bridge-porting, but the original O-ring seals must remain unmodified and in their original location.

4.4 TURBO-CHARGING

(a) Turbo-charging is not permitted unless fitted as standard to the particular model.

(b) Turbocharger/s and associated inlet and exhaust manifold/s are free provided:

(i) The compressor housing inlet diameter is no larger than the original standard turbocharger compressor wheel inducer diameter plus 10%.

(c) Twin turbochargers may be replaced by a single turbocharger configuration with an inlet cross sectional area no greater than the combined inlet cross sectional area of the standard twin turbochargers.

(d) Measurements for the compressor housing inlet diameter and cross sectional area shall be taken at the narrowest point of the inlet - within 1mm of the front of the compressor wheel.

(e) All other associated components including intercooler/s and boost controller/s are free, however each intercooler pipe (both to and from the intercooler) must only be used to channel air.

4.5 SUPERCHARGING

(a) Supercharging is not permitted unless fitted as standard to the particular model.

(b) Each supercharger and associated inlet and exhaust manifold/s must remain unchanged unless an alternate supercharger and manifold/s are recognised by CAMS and are documented on the vehicle recognition document. To be considered, an alternate supercharger must meet the following requirements:

(i) The type of supercharger must be maintained (e.g. Roots, Twin Screw, Centrifugal etc.);

(ii) The per cycle flow of the supercharger is no more than a maximum of 40% greater than the standard vehicle supercharger per cycle flow ; and

(iii) The OEM throttle body as supplied by the vehicle manufacturer must remain unchanged.

(c) If an alternate supercharger and manifold/s exist in the vehicle recognition document for that vehicle, then the standard or the alternate supercharger may be used.

(d) Boost pressure and all other associated components including pulleys, intercooler/s and boost controller/s are free, however each intercooler pipe (both to and from the intercooler) must only be used to channel air.

4.6 OIL SYSTEM

Dry sump systems are permitted. The oil tank must be situated in the luggage compartment where possible or otherwise fully shielded from the cockpit. Oil lines may pass through the cockpit provided they are insulated and there are no joins save those at the front or rear bulkheads.

4.7 EXHAUST

The complete exhaust system is free from the cylinder head exhaust port. The original exhaust mounting brackets may be removed and additional brackets may be fitted, provided that their sole function is the location of the exhaust.

4.8 ENGINE MOUNTS

Engine mounts, being components fitted between the cylinder block and chassis/cross member/sub frame/ bodyshell, are free. The engine may be moved within the constraints of the existing bodywork. Where the

© Confederation of Australian Motor Sport Ltd. All use subject to Conditions of Use at www.cams.com.au

engine block fitted is other than the original block or where it is relocated, a scattershield complying with Schedule M (refer “General Requirements for Cars and Drivers”) must be fitted.

5. PIPING AND FUEL TANKS

5.1 FUEL TANKS

(a) The fuel tank may be modified or replaced by one or more of free but safe design; an FIA-approved (FT3 specification) bladder tank is recommended.

(b) It must be mounted in the same general location, where possible utilising the existing mounting facilities, or in under the luggage compartment.

(c) For all vehicles, a flame and liquid-proof bulkhead must be fitted between all internally mounted fuel system components, save for fuel lines as per 5.3 below, and the driver.

(d) The removal, replacement and/or reshaping of the body work is permitted provided the sole purpose is for the placement and fitting of the fuel tank/s and for maintaining a flame and liquid proof bulkhead.

(e) Additional supplementary fuel tank/s may be added provided it complies with items (a) to (d) above.

(f) The articles of CAMS Manual Schedule N (Fuel Tanks and Refuelling) shall also apply including Article 2.8 in regard to the maximum capacity.

5.2 TANK FILLERS

(a) Dry Break fittings are permitted, and must be fitted in compliance with Schedule N (refer “General Requirements for Cars and Drivers”). Tank fillers must not protrude beyond the bodywork unless standard and must be effected in such a way that no fuel spilt in the filling process will leak into the interior compartments of the car.

(b) Where the existing fuel filler position is retained, the standard filler orifice may be modified to accept a replacement cap of free design.

(c) Alternatively the filler may be relocated into the luggage compartment; an opening of a maximum 250mm x 250mm may be made in the floor of the luggage compartment for access to underfloor tanks.

NOTE: In all cases, tank fillers must be designed to ensure an efficient closing action which reduces the risk of accidental opening following a crash impact.

5.3 FUEL PUMPS/FILTERS

Fuel pumps, fittings, and filters are free including the addition of surge tanks / swirl pots. Fuel lines must be made from a material suitable for the purpose. Where the fuel lines pass through the cockpit, there must be no connections within the cockpit save at the front and rear bulkheads.

6. COOLING/OIL SYSTEM

6.1 RADIATOR

The radiator is free. Material may be removed from the radiator support panel to improve the passage of air and for mounting purposes.

6.2 RADIATOR COWL/SHROUD

Radiator cowls/shrouds may be removed or replaced with one of free design.

6.3 ENGINE COOLING FANS

Engine cooling fans and their control systems are free.

6.4 OIL COOLERS

Engine oil coolers are free subject to Article 1.6

7. TRANSMISSION TO THE WHEELS

7.1 REPLACEMENT OF TRANSMISSION COMPONENTS

(a) The gearbox/transaxle and/or final drive assembly is free.

© Confederation of Australian Motor Sport Ltd. All use subject to Conditions of Use at www.cams.com.au

(b) The replacement gearbox/transaxle and/or final drive assembly must remain in the same general location relative to the engine as originally installed by the manufacturer. One component, i.e., gearbox or transaxle, cannot replace another. Sequential shifting mechanisms for gearboxes or transaxles may be fitted as replacement to standard H pattern. The shift mechanism must be manually operated via a mechanical linkage to the transmission or by pneumatic or electronic assistance.

(c) Paddle operated shifting mechanisms are also permitted.

(d) The number of forward ratios must not exceed six (6).

(e) Additional lubricant cooling devices, including fans are permitted. The circulating pump, radiator, and air intake may not be located in the cockpit.

7.2 CLUTCH

The complete clutch assembly, comprising the pressure plate, clutch plate, flywheel and actuation, is free.

7.3 TAILSHAFT/DRIVESHAFTS

The tailshaft/driveshafts and associated universal or CV-joints are free.

8. SUSPENSION AND STEERING

8.1 FRONT SUSPENSION COMPONENTS

The suspension components are free, but the original configuration (e.g., strut, wishbone, etc.) must be retained. The pivot points on the body and crossmember may be relocated. Springs are free provided that the type and location are unchanged (by “type” is meant coil, torsion bar etc.). Spring seats on the bodyshell or suspension components may be made adjustable. Additional springs may be added which are concentric with the suspension dampers.

8.2 REAR SUSPENSION COMPONENTS

All rear suspension components, which do not function as a springing medium, are free. Bushings are free. Coil springs are free and may be relocated to be concentric with the suspension damper. Where the rear axle is sprung and located by a leaf rear spring (Hotchkiss), it is permitted to replace a leaf spring with a spring of free design or, it is permitted to add an additional lateral location device (Watts or Panhard etc), and one additional longitudinal suspension arm on each side of the vehicle. Such additional components must involve only the addition of metal. The leaf spring may be varied in thickness and number of leaves, and may be supplemented by a coil spring concentric with the suspension damper.

8.3 BUMP STOPS

Bump stops, being the components designed to ultimately limit the suspension travel, are free.

8.4 SUSPENSION DAMPERS

The make and size of suspension dampers are free. The number of dampers and pivot point locations of telescopic dampers on the bodyshell may not be altered. Telescopic dampers may be used to replace lever action dampers and the bodyshell/chassis may be locally modified to accommodate the additional pivot points.

8.5 WHEEL BEARINGS, HUBS AND TRUNNIONS

Wheel hubs, bearings and trunnions are free.

8.6 MACPHERSON STRUT TOP MOUNTS

MacPherson strut top mounts are free providing that they utilise the standard bodyshell mounting facilities.

8.7 SUSPENSION BRACE

A brace of free design may be fitted between the upper suspension pivot points on either side of the longitudinal centreline of the vehicle providing s that the anchorage point of the brace is within 100mm of the suspension pivot point.

8.8 ANTI-SWAY BARS

Anti-sway bars and the mounting points and linkages between the anti-sway bar and suspension components or bodyshell may be added or replaced freely.

© Confederation of Australian Motor Sport Ltd. All use subject to Conditions of Use at www.cams.com.au

8.9 RIDE HEIGHT ADJUSTMENT

Adjustable spring platforms, rear leaf spring shackles, spacers located directly at either end or between coil springs, lowering blocks of solid/rigid material and torsion bar ride height adjusters are all free.

8.10 WHEEL TRACK

The front and rear track dimensions may be increased by a maximum of 100mm. Track extenders or spacers may be used provided that they are fixed to the wheel hub.

8.11 RIDE HEIGHT

All fully sprung parts of the car must clear the ground when both tyres on the same side of the vehicle are deflated.

8.12 STEERING AND WHEEL ALIGNMENT

(a) The steering tie rod ends may be replaced freely. The wheel alignment settings are free.

(b) Each power steering pump is free. A belt driven power steering pump may be replaced with an alternate drive power steering pump, or removed entirely. If removed the steering rack may be devalved. Each power steering hose may be removed or replaced accordingly.

(c) A vehicle with 4-wheel steering may remove all components of this system only, excluding the rear toe arms. The inner connection of the rear toe arms may be locked in place with a lock out bar or other method.

9. BRAKES

9.1 MASTER CYLINDERS

Power boosters, master cylinders and associated pushrods, fluid lines and hoses are free. The position of replacement master cylinders is free and holes of the minimum necessary dimensions may be made in existing panels to facilitate such fitment. Brake proportioning valves are free. Anti-lock brake systems may be removed or deactivated.

9.2 BRAKE ROTORS

The original brake rotors may be replaced. Such replacements may be of free design providing that they are made from a ferrous material. Discs may be interchanged with drums. Disc mounting hats are free subject to their being made from aluminium alloy or ferrous material.

9.3 BRAKE CALIPERS

Brake calipers and pads are free, subject to the main housing being made of a ferrous material or an aluminium alloy. Titanium pistons are permitted. Where freedom is not otherwise granted, suspension components may be modified to permit fitment of replacement calipers.

9.4 HANDBRAKE

The handbrake is free.

9.5 BRAKE COOLING

Protection shields/stone guards on unsprung components may be added or removed. It is permitted to fit ducting for the passage of air to the brakes provided that it remains within the perimeter of the coachwork when viewed from above and that no bodywork alterations are required.

10. WHEELS AND TYRES

10.1 WHEELS

Wheels are free. The requirements of Article 3.10 Wheel and Tyre Clearance and Article 8.10 Wheel Track must be respected.

10.2 TYRES

Tyres are free provided that they are fitted onto a rim in compliance with Schedule E (refer “General Requirements for Cars and Drivers”).

© Confederation of Australian Motor Sport Ltd. All use subject to Conditions of Use at www.cams.com.au

11. ELECTRICAL

11.1 ELECTRICAL SYSTEM

The starting, lighting and turn signalling apparatus must be in working order at the start of each competition. Number plate lights and side indicator repeater lamps may be removed. All globes must at least meet the original equipment specification. Aftermarket ECU's are allowable. All electrical systems are otherwise free.

11.2 BATTERY

The battery and its location are free but it must be safely and securely mounted. It must be adequately covered so as to prevent short circuits and leakage, in any position. Where the battery is relocated, the original battery mount may be removed.

11.3 WINDSCREEN WIPERS

The windscreen wiper mechanism may be removed where the windscreen is removed. Where retained, the tension springs and wiper arms may be modified. Wind deflectors may be added. Headlight and rear window wipers and washers may be removed. The windscreen washer bottle, pump and hoses and any mounting bracket are free.

11.4 RETRACTABLE HEADLIGHTS

Retractable headlights may be removed provided the opening is covered with fixed panels. In such cases headlight globes may be mounted behind the existing front indicator or driving light lens (the lens being made of clear material). The indicator function may be provided by a mechanism allowing either this globe to flash, or alternately be provided by side repeater indicator lighting.

12. COCKPIT/DRIVER'S COMPARTMENT

12.1 STEERING WHEEL

The steering wheel may be replaced by one of at least 300mm diameter. It is permitted to add a steering wheel boss, possibly incorporating a quick release mechanism, to enable the fitment of a permissible steering wheel. The steering column may be repositioned by the addition of spacers/longer bolts at the existing rear mounting points provided no other modifications are required.

12.2 CONTROLS

Footrests and heat protection panels may be added to the driver's foot well cavity. Pedals and pedal boxes are free.

12.3 INSTRUMENTS

Instruments are free. Any holes in the dash resulting from the removal of instruments must be neatly closed by the addition of a closing panel. Where possible, all replacement instruments must be mounted in the dash where the original instruments were situated, but may otherwise be mounted in a panel in front of the original dash.

12.4 CARPET AND INTERIOR TRIM

(a) The following items may be removed from the interior of the vehicle:

(i) Roof lining and interior trim.

(ii) Consoles on the transmission tunnel and which are not integrated with the dash assembly.

(iii) Floor carpet and associated underfelt.

NOTE: Where the interior trim is removed, any opening which may allow entry of parts of the driver's body or clothing must be closed with a flat panel.

12.5 SEATS

The driver's seat may be replaced with another seat in compliance with Schedule C (refer "General Requirements for Cars and Drivers"). Original seat mounting brackets may be removed or replaced and/or other mountings added provided that they extend no further than 50mm from the plan view of the seat. The passenger's seat, and rear seats (where fitted) and associated seat belts are free.

12.6 REMOVABLE REAR WINDOW SHELF

The removable rear window shelf in two volume cars may be removed together with its supports, or held down by additional fasteners.

© Confederation of Australian Motor Sport Ltd. All use subject to Conditions of Use at www.cams.com.au

12.7 HEATER

All components solely associated with the heating, air conditioning and ventilation system are free. Any openings created by the removal of ducting, vents and controls from the dash must be closed by the addition of panels, which may be used to mount additional instruments or controls.

12.8 ACCESSORIES:

The radio, aerial, speakers and speaker mounts may be removed. Fog/driving lights, which are separate from the main lighting system, may be removed, as may internal cockpit lights. Accessories that do not increase performance (e.g. additional lamps, mirrors, etc.) may be added.

13. SAFETY STRUCTURES

13.1 SAFETY CAGE/ROLL OVER PROTECTION STRUCTURES

Safety cage structures must comply with Schedule J (refer “General Requirements for Cars and Drivers”) save that in closed cars issued with a log book prior to 1 January 2012 fitted with a safety cage complying with the prescriptions of Article 13.3 of Schedule J will be acceptable.

14. FUEL

14.1 FUEL

Only fuel as defined by CAMS in Schedule G (see “General Requirements for Cars and Drivers”), may be used.

14.2 AIR

Only air may be mixed with the fuel as an oxidant

GROUP 2F – GROUP 2F PRODSPORTS

1. DEFINITIONS

1.1 GROUP 2F PRODSPORTS

A race vehicle derived from a registrable production sports car, with limited modifications to improve performance and reliability in speed events and races.

1.2 ELIGIBILITY:

Cars in this Group must be Class I vehicles from the Sports Car Recognition list approved by CAMS. See Group 2B Prodsports regulations for acceptance criteria.

1.3 ELASTOMERIC BUSHINGS

Suspension components utilising an elastomer (e.g. rubber, urethane) to permit freedom of movement in three axes at suspension pivot points. Where the bush incorporates an outer metal shell and/or central crush tube, they shall be regarded as part of the bushing. Where the bushing is integrated with the arm or other secondary component, only the elastomer material shall be regarded as the bushing for replacement purposes.

1.4 DECORATIVE STRIPS

These are defined as any parts following the external contour of the bodywork and less than 100mm high; the function of which is to prevent minor body damage or is decorative. Badges describing the vehicle manufacturer and/or model are considered to be within this definition.

1.5 MATERIALS

Components which are for decorative purposes only and which are in nature not structural/ load-bearing (e.g., instrument surrounds, facia panel decorations), may be formed from carbon fibre or carbon/Kevlar matting. The use of carbon/carbon Kevlar composites, or titanium alloys, in any non-standard structural or mechanical component, unless specifically provided for by an article in the present regulations, is prohibited.

1.6 FREE

A component, deemed to be free under these regulations may, where fitted to the vehicle as standard, be removed or replaced. Where the removed component is replaced, the replacement is not restricted in design or material (unless otherwise specified) providing it performs only the same function. No modification may be made to surrounding components or bodywork to which the replacement is fitted, unless otherwise permitted. Where freedom is granted for the fitment of any component, such freedom is restricted to that component and

© Confederation of Australian Motor Sport Ltd. All use subject to Conditions of Use at www.cams.com.au

such modifications as are allowed in Article 3.10. For the purpose of this article, a component shall be deemed to include all other components with which it is integrated, or to which it is attached by means the manufacturer intended to be permanent. Where a system is deemed as free, all components solely associated with that system are regarded as free, as per above.

2. REGULATIONS

2.1 ROLE OF CAMS

The following technical regulations for Group 2F Prodsports are issued by CAMS and must be read in conjunction with the relevant Schedules of "General Requirements for Cars and Drivers".

2.2 PUBLICATION DATE FOR AMENDMENTS:

Each year in January at the latest, CAMS will publish all changes made to these regulations in the CAMS Manual of Motor Sport. Changes made for safety may come into force without notice. CAMS reserve the right to alter regulations at its discretion.

2.3 MEASUREMENT

All measurements relevant to the bodywork and suspension must be made while the car is stationary on a flat horizontal surface, without driver and with the steering centred.

2.4 LOG BOOK/ELIGIBILITY

The Competitor is responsible for furnishing any documentation to prove the eligibility of any part used or modification performed otherwise outside of these regulations.

2.5 STANDARD EQUIPMENT

Where an article in the present regulations refers to standard equipment, it refers to the specifications of or parts fitted to the particular model or marketing designation of the vehicle as supplied by the manufacturer. Parts available as options, whether at additional cost or not, are not eligible unless otherwise specified. The model represented shall be as specified on the entry form.

2.6 MODIFICATIONS

Any aspect relating to the construction, modification and/or preparation of the vehicle, which is not specifically authorised in the present regulations, is forbidden. The only work which may be otherwise performed on the car is that necessary for normal servicing or the replacement of parts damaged by wear or accident, or that required under Schedules A, B and C (refer "General Requirements for Cars and Drivers"). Unless otherwise specified, a part replaced through damage or wear must only be replaced by an original part identical to the previously undamaged one.

3. BODYWORK AND DIMENSIONS

3.1 STRENGTHENING

It is permitted to seam weld the bodyshell. Metal to a thickness of up to 5mm may be added to fully sprung components to a distance of 75mm from the edge of each suspension pivot point aperture. Such metal must follow the contour of the original metal at all times. It is not permitted to add or incorporate any other components which contribute to the rigidity of the bodyshell, other than the roll over protection structure as described in Article 13.1, and a strut tower brace as described in Article 8.7.

3.2 AERODYNAMIC DEVICES

(a) **General:** Any specific part of the car influencing its aerodynamic performance fitted as specified in this article:

(i) May not be used for mounting any additional devices or performing any alternative functions other than the channelling of air for cooling purposes.

(ii) Must be rigidly secured to the entirely sprung part of the car (rigidly secured means not having any degree of freedom).

(iii) Must remain in its entirety immobile in relation to the remaining sprung parts of the car. Where an original aerodynamic device incorporates a moveable component, such adjusting mechanism must be rendered inoperative and the component fixed into position.

(b) **Front aerodynamic devices:**

It is permitted to fit an airdam to the front of the car, subject to the following restrictions:

(i) It is completely contained within the vertical projection of the original vehicle (see diagram 1).

© Confederation of Australian Motor Sport Ltd. All use subject to Conditions of Use at www.cams.com.au

(ii) No part below a horizontal plane passing through the centre of the wheel hubs at their extremities may extend further rearward than the wheelarch opening at the forward point where it intersects this plane.

(iii) No part above a horizontal plane passing through the centre of the wheel hubs shall extend into the wheelarch opening

(iv) No undertray is permitted to the airdam.

(c) **Rear aerodynamic devices:** It is permitted to fit a rear deck spoiler or wing provided it was supplied as a factory option for that particular model of vehicle or another model of the same family of vehicle. It is permissible to replace one rear aerodynamic device with another complying with the present article.

DIAGRAM 1

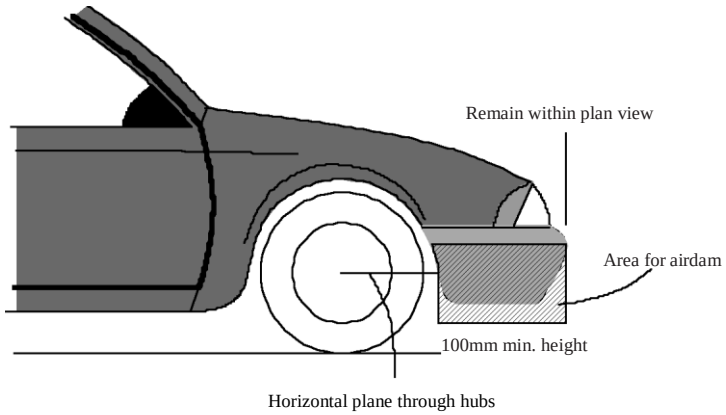

3.3 COCKPIT COVERING, OPEN VEHICLES

It is permitted for the cockpit opening of open vehicles to be partially covered by a tonneau cover, able to be removed without the aid of tools. Where a manufacturer provides a hard top as a factory option, this may be installed in compliance with the manufacturer's instructions; a vehicle so equipped remains considered as an open vehicle.

3.4 VEHICLE EMBELLISHMENTS

External decorative strips and mud flaps may be removed. Sump guards/splash guards may be removed or added. If sump/splash guards are added and they are in contact with the external airstream, they must be perforated with 50mm diameter holes with centres of maximum 150mm apart. No part of any additional or replacement sump/splash guard may extend to the rear of the rearmost point of the engine block as installed in the vehicle.

3.5 REGISTRATION PLATES

Registration plates, registration plate mountings and associated lighting components may be removed.

3.6 SOUND DEADENER

Sound deadener (bitumen and fabric types etc.) may be removed from the body shell and hung panels.

3.7 WINDSCREEN AND MIRRORS

Unless fitted as standard with a non-glass windscreen, the windscreen must be of laminated glass, and may incorporate defrosting equipment. Where the windscreen is demountable, it may be removed. External rear view mirrors may be replaced or deleted, provided that Schedule C (refer "General Requirements for Cars and Drivers") is respected at all times.

3.8 BONNET CATCHES

The original bonnet fasteners and release mechanisms may be removed. At least two separate fasteners for the bonnet must be fitted.

© Confederation of Australian Motor Sport Ltd. All use subject to Conditions of Use at www.cams.com.au

3.9 WINDOW REGULATORS

Where a car is fitted with electric window regulators, it is permitted to replace them with manual window regulators and, where necessary, door trims from the same family of vehicle. Electric door lock actuators may be removed or rendered inoperative.

3.10 GENERAL

Holes may be drilled for fasteners (e.g. bolts, screws, rivets etc.). It is permitted to cut holes of the minimum necessary dimension for the passage of wiring, and fuel, brake and oil lines/hoses.

3.11 TIMING DEVICE

It is permitted to remove the minimum amount of metal necessary to facilitate fitment of a timing transponder to the upper surface of the cockpit floor.

3.12 RACING WEIGHT

Vehicles shall be required to comply with the racing weights as may be set out on the Recognition list.

4. ENGINE

(a) **Reciprocating engine:** The cylinder block may be bored to a maximum 1.5mm oversize. The cylinder may be modified by the removal of metal save that the original components must always be able to be identified. The internal rotating and reciprocating components, including the camshaft/s are free, but the original stroke must be respected.

(b) **Rotary engine:** The rotors, tip seals and crankshaft are free. The ports in the end and intermediate plates may be modified by the removal of metal, including “bridge” porting, but the original O-ring seals must remain unmodified and in their original location.

4.1 FUEL SYSTEM

The carburettor, where fitted, may be replaced by one of free design. On fuel injected vehicles, the fuel injectors, engine control unit and associated wiring harness are free. Air cleaners and their housings are free. The inlet manifold may be modified by the removal of metal provided the original component is able to be identified.

4.2 SUPERCHARGING

(a) Where supercharging is recognised as standard production for the model, the boost pressure may be altered.

(b) The drive pulleys of a mechanical supercharger may be modified to alter drive speed.

(c) A restricting orifice must be fitted to the inlet tract prior to the air entering the supercharging device/s so that all air used in the combustion process of the engine must pass through the orifice/s.

(d) The maximum internal diameter of the air intake into the compressor is 34mm for a single supercharger or 24mm for each of two superchargers and must be maintained for a distance of at least 3mm.

(e) The maximum diameter of the restricting orifice must be complied with at all operating temperatures. For vehicles utilising a turbine type compressor, the restrictor must be fitted as per drawing 254-4 in the CAMS Manual.

(f) For other types of superchargers, the upstream extremity of each restriction must be situated a maximum of 50mm from the intake port of the compressor housing.

4.3 OIL SYSTEM

Dry sump systems are permitted. The oil tank must be situated in the luggage compartment where possible or otherwise fully shielded from the cockpit. Oil lines may pass through the cockpit provided they are insulated and there are no joins save those at the front or rear bulkheads.

4.4 EXHAUST

For a turbocharged/supercharged vehicle the exhaust manifold and turbo supercharger must remain a standard. The complete exhaust system is free downstream of the exit from the turbo housing. For other engine configurations, the exhaust is free from the cylinder head exhaust port. The original exhaust mounting brackets may be removed and additional brackets may be fitted, provided that their sole function is the location of the exhaust.

4.5 ENGINE MOUNTS

The elastomeric components of the engine mounts may be exchanged for a harder grade of elastomer.

© Confederation of Australian Motor Sport Ltd. All use subject to Conditions of Use at www.cams.com.au

4.6 FLYWHEEL AND CRANKSHAFT DAMPER

The flywheel may be replaced by a unit of free design, and manufactured from steel. The starter ring gear must be the original component secured to the flywheel as per the original. The torsional damper is free.

5. PIPING AND FUEL TANKS

5.1 FUEL TANKS

(a) The fuel tank may be modified or replaced by one of free design; an FIA-approved (FT3 or greater specification) bladder tank is recommended.

(b) It must be mounted in the same general location, where possible utilising the existing mounting facilities, or in the luggage compartment.

(c) For all vehicles, a flame and liquid-proof bulkhead must be fitted between the driver and all internally mounted fuel system components save for fuel lines as per 5.3 below.

(d) The articles of CAMS Manual Schedule N (Fuel Tanks and Refuelling) shall also apply including Article 2.8 in regard to the maximum capacity.

5.2 TANK FILLERS

(a) Dry Break fittings are permitted, and must be fitted in compliance with Schedule N (refer "General Requirements for Cars and Drivers"). Tank fillers must not protrude beyond the bodywork and must be effected in such a way that no fuel spilt in the filling process will leak into the interior compartments of the car.

(b) Where the existing fuel filler position is retained, the standard filler orifice may be modified to accept a replacement cap of free design.

(c) Alternatively the filler may be relocated into the luggage compartment; an opening of a maximum 250mm x 250mm may be made in the floor of the luggage compartment for access to underfloor tanks.

Note: In all cases, tank fillers must be designed to ensure an efficient closing action which reduces the risk of accidental opening following a crash impact.

5.3 FUEL PUMPS/FILTER

Fuel pumps, fittings, and filters are free. Fuel lines must be made from a material suitable for the purpose. Where the fuel lines pass through the cockpit, there must be no connections within the cockpit save at the front and rear bulkheads.

6. COOLING SYSTEM

6.1 RADIATOR, COWLS AND FANS

The radiator is free providing that the only body modification required for fitment is the drilling of holes for mounting purposes. Radiator cowls/shrouds on the rear of the radiator for the purpose of sealing a fan may be removed. Radiator cowls in front of the radiator must be retained in their entirety. It is permitted to add additional shrouds or ducting. Engine cooling fans are free.

6.2 OIL COOLERS

Engine oil coolers are free subject to Article 1.6.

6.3 INLET CHARGE AIR COOLING

Where supercharging is used, the pipes between the intercooler (if fitted), manifold and the supercharging device are free but their only purpose must be to channel air.

7. TRANSMISSION TO THE WHEELS

7.1 FINAL DRIVE

Any alternative final drive ratio offered by the manufacturer for the model may be used.

7.2 COOLING

An additional lubricant cooling device, including a fan is permitted. The circulating pump, radiator, and air intake may not be located in the cockpit.

7.3 CLUTCH

The pressure plate and clutch plate, is free.

© Confederation of Australian Motor Sport Ltd. All use subject to Conditions of Use at www.cams.com.au

7.4 TAILSHAFT/DRIVESHAFTS/AXLES:

The tailshaft/driveshafts/axles and associated universal or CV-joints are free.

8. SUSPENSION AND STEERING

8.1 SPRINGS

Springs are free provided that the type and location are unchanged (where type" means coil, torsion bar, leaf etc.).

8.2 BUMP STOPS

Bump stops, being the components designed to ultimately limit the suspension travel, are free and may be repositioned.

8.3 BUSHES

Elastomeric bushes used at suspension pivot points may be replaced by mechanically identical elastomeric bushings (e.g. urethane may replace rubber).

8.4 SUSPENSION DAMPERS

The make and size of suspension dampers are free. The number of dampers and pivot point locations may not be altered.

8.5 WHEEL BEARINGS, HUBS AND TRUNNIONS

Trunnions are free. Bearings may be replaced by mechanically identical components. On vehicles with live rear axle assemblies, semi-floating axles may be replaced by full floating axles. Rear axle housings may be modified to facilitate the fitment of suitable spindles, associated hubs and bearings.

8.6 MACPHERSON STRUT TOP MOUNTS

MacPherson strut top mounts are free providing that they utilise the standard bodyshell mounting facilities.

8.7 STRUT TOWER BRACE

A brace of free design may be fitted between the front suspension towers providing it only links the towers and connects within 150mm of the suspension pivot points

8.8 ANTI-SWAY BARS

Original anti-sway bars may be replaced by others mounted in the same mounting location. Where no bar is fitted originally it is permitted to add one, including mounting points. Linkages between the anti-sway bar and suspension components or bodyshell are free.

8.9 RIDE HEIGHT ADJUSTMENT

Adjustable spring platforms, rear leaf spring shackles, spacers located directly at either end or between coil springs, lowering blocks of solid/rigid material and torsion bar ride height adjusters are free.

8.10 WHEEL TRACK

The front and rear track dimensions are free save that the upper part of the tyre, down to the flange over the wheel hub centre must be within the perimeter of the vehicle when viewed vertically from above (see diagram 2). Track extenders or spacers may be used provided that they are fixed to the hub.

DIAGRAM 2

8.11 ADDITIONAL LINKAGES

Where a live rear axle is located by leaf springs (Hotchkiss suspension), it is permitted to fit a Panhard rod or watts link and associated brackets to the vehicle. Such brackets must only involve the addition of metal.

© Confederation of Australian Motor Sport Ltd. All use subject to Conditions of Use at www.cams.com.au

8.12 RIDE HEIGHT

In as raced condition, all fully sprung parts of the car, with the exception of the entire exhaust system, must be at least 100mm above the ground when measured on a flat level surface.

8.13 WHEEL ALIGNMENT FACILITIES

The wheel alignment settings are free. It is permitted to relocate all pivot points radially by up to 20mm within the confines of the existing mounting brackets or body panels. No metal may be removed save that directly associated with the actual pivot point relocation. For vehicles with a live rear axle, camber or toe may vary by no more than 1/2° from standard. Tie rod ends are free.

9. BRAKES

9.1 MASTER CYLINDERS

The brake master cylinder assembly (including power boosters and associated pushrods) may be replaced provided that the replacement master cylinder/s and power booster or other such system utilises the existing mounting facilities. A dual master cylinder system with cockpit adjustable brake bias is permitted. Brake proportioning valves may be added or interchanged freely. Anti-lock brake systems may be removed or deactivated.

9.2 BRAKE ROTORS

The standard brake rotors may be replaced. Such replacements may be of free design providing that they are made from a ferrous material. Discs may be interchanged with drums. Disc mounting hats are free subject to their being made from aluminium alloy or ferrous material.

9.3 BRAKE CALIPERS

Brake calipers and pads are free, subject to the main housing being made of a ferrous material or an aluminium alloy and utilising no more than four pistons. Titanium pistons are permitted. Suspension components may be modified to permit fitment of replacement calipers.

9.4 HANDBRAKE

Handbrake mechanisms are free.

9.5 BRAKE COOLING

Protection shields/stone guards on unsprung components may be added or removed. It is permitted to fit ducting for the passage of air to the brakes provided that it remains within the perimeter of the coachwork when viewed from above and that no bodywork alterations are required.

10. WHEELS AND TYRES

10.1 WHEELS

Wheels may be replaced by others of free design. Where the wheels supplied by the car manufacturer are not retained, the maximum rim width and diameter of the replacement wheels, based on the vehicle weight is given in the table below:

Racing Weight*	Maximum Rim Width	Maximum Diameter
Up to 930kg	7″	16″
931 – 1280kg	8″	17″
Above 1280kg	9″	18″

NOTE: The spare wheel, jack and any associated brackets may be removed.

* Refer to Definitions - Technical (refer “General Requirements for Cars and Drivers”).

10.2 TYRES

At the commencement of any race or practise session each tyre must:

(i) Be of a type included on the current CAMS Production Car Tyre list.

(ii) Have at least a minimum tread depth. The definitive method of determining minimum tread depth shall be the tread wear indicators provided by the tyre manufacturer. At no time prior to practise or racing may any tread wear indicator be exposed or in the case where the indicator is a dimple in the tyre, worn below such indicator. This does not apply to the shoulder of the tyre.

© Confederation of Australian Motor Sport Ltd. All use subject to Conditions of Use at www.cams.com.au

(iii) Be fitted on to a rim in compliance with Schedule E (refer “General Requirements for Cars and Drivers”).

11. ELECTRICAL

11.1 ELECTRICAL SYSTEM

The wiring and electrical connectors, switches, fuses and circuit breakers, starting, ignition and generating systems are free. The starting, lighting and turn signalling apparatus must be in working order at the start of each competition. All globes must at least meet the original equipment specification.

11.2 BATTERY

The battery and its location are free but it must be safely and securely mounted. It must be adequately covered so as to prevent short circuits and leakage, in any position. Where the battery is relocated, the original battery mountings may be removed.

11.3 WINDSCREEN WIPERS

The windscreen wiper mechanism may be removed where the windscreen is removed. The wiper blade tension springs may be modified and wind deflectors added. Headlight and rear window wipers and washers may be removed. The windscreen washer bottle, pump and hoses and any mounting bracket are free. Windscreen wipers must rest in the same location as on a standard car of that make and model.

12. COCKPIT / DRIVER’S COMPARTMENT

12.1 STEERING WHEEL

The steering wheel may be replaced by one that is of at least 300mm diameter. It is permitted to add a steering wheel boss, possibly incorporating a quick release mechanism, to enable the fitment of a permissible steering wheel. The steering column may be repositioned by the addition of spacers/longer bolts at the existing rear mounting points provided no other modifications are required.

12.2 CONTROLS

All driving controls must retain the role laid down for them by the manufacturer. Footrests and heat protection panels may be added to the driver’s footwell cavity. Pedals may be modified, but not the mounting points.

12.3 INSTRUMENTS

Instruments are free, but the original dash must remain. Any holes in the dash resulting from the removal of instruments must be neatly closed by the addition of a closing panel. Where possible, all replacement instruments must be mounted in the dash where the original instruments were situated, but may otherwise be mounted in a panel in front of the original dash.

12.4 CARPET AND INTERIOR TRIM

Roof lining and interior trim down to the lower edge of the windows in closed cars may be removed. Consoles on the transmission tunnel and which are not integrated with the dash assembly may be removed. Floor carpet and associated “underfelt” may be removed. Flat panels trimmed to match the original items may replace moulded door trims for the purpose of fitting a Safety Cage.

12.5 SEATS

The driver’s and/or front passenger’s seats may be replaced with other seats in compliance with Schedule C (refer “General Requirements for Cars and Drivers”). Original seat mountings may be removed or replaced and/or other mountings added provided that they extend no further than 50mm from the plan view of the seat. The rear seats if fitted, and associated seat belts are free. The use of carbon fibre composites in replacement seats is permitted.

12.6 REMOVABLE REAR WINDOW SHELF

The removable rear window shelf in two volume cars may be removed together with its supports, or held down by additional fasteners.

12.7 AIR CONDITIONER

Components solely associated with a refrigerated air conditioning system may be disconnected or removed.

12.8 ACCESSORIES

The radio, aerial, speakers and speaker mounts may be removed. Fog/driving lights, which are separate from the main lighting system, may be removed, as may internal cockpit lights. Accessories, which do not increase performance (e.g. additional lamps, mirrors, etc.), may be added.

© Confederation of Australian Motor Sport Ltd. All use subject to Conditions of Use at www.cams.com.au

13. SAFETY STRUCTURES

13.1 SAFETY CAGE/ROLL OVER PROTECTION STRUCTURES

Safety cage structures must comply with Schedule J (refer “General Requirements for Cars and Drivers”) save that in closed cars issued with a log book prior to 1 January 2012 fitted with a safety cage complying with the prescriptions of Article 13.3 of Schedule J will be acceptable. Where moulded door trims interfere with anti-intrusion bars, they may be replaced with flat items provided the replacements are trimmed to match the original items.

13.2 SAFETY HARNESS

Where the vehicle is not registered for road use, the original driver’s seat belt must be replaced by a safety harness, complying with Schedule I (refer “General Requirements for Cars and Drivers”), with at least four belts in contact with the driver in closed cars, or five belts in an open car.

14. FUEL

14.1 FUEL

Only fuel as defined by CAMS in Schedule G (refer “General Requirements for Cars and Drivers”) may be used. Vehicles of a model that was built after 1 January 1986 must use only unleaded fuel.

NOTE: Leaded Fuel will not be permitted from 1 July 2019.

14.2 AIR

Only air may be mixed with the fuel as an oxidant.

© Confederation of Australian Motor Sport Ltd. All use subject to Conditions of Use at www.cams.com.au